# Victaulic® FireLock™ Series FL-SR Standard Coverage, Standard Response Upright Pendent and Recessed Pendent Sprinklers, K2.8 (4.0), K4.2 (6.1), K5.6 (8.1), K8.0 (11.5)

## 1.0 PRODUCT DESCRIPTION

| STANDARD RESPONSE UPRIGHT SPRINKLERS | | | | |
|---|---|---|---|---|
| **SIN** | **V2861** | **V4261** | **V2703** | **V3401** |
| **ORIENTATION** | UPRIGHT | UPRIGHT | UPRIGHT | UPRIGHT |
| **K-FACTOR[1]** | 2.8 Imp./4.0 S.I. | 4.2 Imp./6.1 S.I. | 5.6 Imp./8.1 S.I. | 8.0 Imp./11.5 S.I. |
| **CONNECTION** | ½" NPT/15 mm BSPT | ½" NPT/15 mm BSPT | ½" NPT/15 mm BSPT/GS | ¾" NPT/20 mm BSPT/GS |
| **MAX. WORKING PRESSURE** | 175 psi (1200 kPa) | 175 psi (1200 kPa) | 175 psi (1200 kPa)<br>cULus 250 psi (1725 kPa) | 175 psi (1200 kPa) |
| **GLOBE RE-DESIGNATION** | GL2861 | GL4261 | – | – |
| **GLOBE EQUIVALENT** | – | – | GL5661 | GL8164 |

| STANDARD RESPONSE PENDENT SPRINKLERS | | | | |
|---|---|---|---|---|
| **SIN** | **V2851** | **V4251** | **V2763** | **V3701** |
| **ORIENTATION** | PENDENT | PENDENT | PENDENT | PENDENT |
| **K-FACTOR[1]** | 2.8 Imp./4.0 S.I. | 4.2 Imp./6.1 S.I. | 5.6 Imp./8.1 S.I. | 8.0 Imp./11.5 S.I. |
| **CONNECTION** | ½" NPT/15 mm BSPT | ½" NPT/15 mm BSPT | ½" NPT/15 mm BSPT/GS | ¾" NPT/20 mm BSPT/GS |
| **MAX. WORKING PRESSURE** | 175 psi (1200 kPa) | 175 psi (1200 kPa) | 175 psi (1200 kPa)<br>cULus 300 psi (2070 kPa) | 175 psi (1200 kPa) |
| **GLOBE RE-DESIGNATION** | GL2851 | GL4251 | – | – |
| **GLOBE EQUIVALENT** | – | – | GL5651 | GL8156 |
| **COMPARABLE TO** | – | – | V2707,V2727 | V3405,V3423 |

| STANDARD RESPONSE RECESSED PENDENT SPRINKLERS | | | | |
|---|---|---|---|---|
| **SIN** | **V2851** | **V4251** | **V2763** | **V3701** |
| **ORIENTATION** | PENDENT | PENDENT | PENDENT | PENDENT |
| **K-FACTOR[1]** | 2.8 Imp./4.0 S.I. | 4.2 Imp./6.1 S.I. | 5.6 Imp./8.1 S.I. | 8.0 Imp./11.5 S.I. |
| **CONNECTION** | ½" NPT/15 mm BSPT | ½" NPT15 mm BSPT | ½" NPT/15 mm BSPT | ¾" NPT/20 mm BSPT |
| **MAX. WORKING PRESSURE** | 175 psi (1200 kPa) | 175 psi (1200 kPa) | 175 psi (1200 kPa)<br>cULus 300 psi (2070 kPa) | 175 psi (1200 kPa) |
| **ESCUTCHEON** | Recessed | Recessed | Recessed | Recessed |
| **GLOBE RE-DESIGNATION** | GL2851 | GL4251 | – | – |
| **GLOBE EQUIVALENT** | – | – | GL5651 | GL8156 |
| **COMPARABLE TO** | – | – | V2707, V2727 | V3405, V3423 |

| AVAILABLE GUARDS/SHIELDS | | | | | |
|---|---|---|---|---|---|
| **SPRINKLER** | **V28** | **V42** | **V27** | **V34** | **V37** |
| **UPRIGHT** | | | ■ | ■ | |
| **PENDENT** | | | ■ | ■ | ■ |

**ALWAYS REFER TO ANY NOTIFICATIONS AT THE END OF THIS DOCUMENT REGARDING PRODUCT INSTALLATION, MAINTENANCE OR SUPPORT.**

 © 2024 Victaulic Company. All rights reserved.

## 1.0 PRODUCT DESCRIPTION (CONTINUED)

| AVAILABLE WRENCHES | | | | | | | |
|---|---|---|---|---|---|---|---|
| Sprinkler | V56-2 recessed | V56 open end | V27-2 recessed | V27 open end | V34-2 recessed | V34 open end | 3/16 hex bit |
| V2861 and V4261 | | ■ | | | | | |
| V2703 and V2763 | | | | ■ | | | ■ |
| V3401 | | | | | | ■ | ■ |
| V2851, and V4251 | ■ | ■ | | | | | |
| V2763 | | | ■ | ■ | | | ■ |
| V3701 | | | ■ | ■ | | | ■ |

**Factory Hydrostatic Test:** 100% @ 500 psi/3447 kPa/34 bar
100% @ 600 psi/4137 kPa/41 bar – Applies to V2763 only

**Min. Operating Pressure:** UL/FM: 7psi/48 kPa/.5 bar
VdS: 5psi/35 kPa/.35 bar

**Temperature Rating:** See tables in section 2.0

[1] For K-Factor when pressure is measured in bar, multiply S.I. units by 10.0.

 © 2024 Victaulic Company. All rights reserved.

## 2.0 CERTIFICATION/LISTINGS

| UPRIGHT APPROVALS/LISTINGS | | | | |
|---|---|---|---|---|
| **SIN** | **V2861** | **V4261** | **V2703** | **V3401** |
| Nominal K Factor Imperial | 2.8 | 4.2 | 5.6 | 8.0 |
| Nominal K Factor S.I.[2] | 4.0 | 6.1 | 8.1 | 11.5 |
| Orientation | UPRIGHT | UPRIGHT | UPRIGHT | UPRIGHT |
| | **Approved Temperature Ratings F°/C°** | | | |
| cULus | 135°F/57°C<br>155°F/68°C<br>175°F/79°C<br>200°F/93°C<br>286°F/141°C<br>360°F/182°C | 135°F/57°C<br>155°F/68°C<br>175°F/79°C<br>200°F/93°C<br>286°F/141°C<br>360°F/182°C | 135°F/57°C<br>155°F/68°C<br>175°F/79°C<br>200°F/93°C<br>286°F/141°C<br>360°F/182°C<br>500°F/260°C | 135°F/57°C<br>155°F/68°C<br>175°F/79°C<br>200°F/93°C<br>286°F/141°C<br>360°F/182°C |
| FM | – | – | 135°F/57°C<br>155°F/68°C<br>175°F/79°C<br>200°F/93°C<br>286°F/141°C<br>360°F/182°C | 135°F/57°C<br>155°F/68°C<br>175°F/79°C<br>200°F/93°C<br>286°F/141°C<br>360°F/182°C |
| LPCB | – | – | 135°F/57°C<br>155°F/68°C<br>175°F/79°C<br>200°F/93°C<br>286°F/141°C<br>360°F/182°C | 135°F/57°C<br>155°F/68°C<br>175°F/79°C<br>200°F/93°C<br>286°F/141°C<br>360°F/182°C |
| CE | – | – | 135°F/57°C<br>155°F/68°C<br>175°F/79°C<br>200°F/93°C<br>286°F/141°C<br>360°F/182°C | 135°F/57°C<br>155°F/68°C<br>175°F/79°C<br>200°F/93°C<br>286°F/141°C<br>360°F/182°C |
| VdS | – | – | 135°F/57°C<br>155°F/68°C<br>175°F/79°C<br>200°F/93°C<br>286°F/141°C | 135°F/57°C<br>155°F/68°C<br>175°F/79°C<br>200°F/93°C<br>286°F/141°C |
| CCC<br>ZSTZ-15 | – | – | 155°F/68°C<br>175°F/79°C<br>200°F/93°C<br>286°F/141°C<br>360°F/182°C | 155°F/68°C<br>175°F/79°C<br>200°F/93°C<br>286°F/141°C<br>360°F/182°C |

[2] For K-Factor when pressure is measured in Bar, multiply S.I. units by 10.

**NOTES**

- Listings and approval as of printing.
- Where cULus Listed, Polyester and VC-250 Coatings Listed as Corrosion Resistant (V3401 with VC-250 Only)
- Where FM Approved, VC-250 Coating Approved as Corrosion Resistant
- New York City Acceptance - All UL Listed and/or FM Approved sprinklers acceptable to NYC per section 28-113 of the Administrative Code and the OTCR Rule.

 © 2024 Victaulic Company. All rights reserved.

## 2.0 CERTIFICATION/LISTINGS (CONTINUED)

| PENDENT APPROVALS/LISTINGS | | | | |
|---|---|---|---|---|
| **SIN** | **V2851** | **V4251** | **V2763** | **V3701** |
| Nominal K Factor Imperial | 2.8 | 4.2 | 5.6 | 8.0 |
| Nominal K Factor S.I.[2] | 4.0 | 6.1 | 8.1 | 11.5 |
| Orientation | PENDENT | PENDENT | PENDENT | PENDENT |
| Escutcheon | Flush/Extended | Flush/Extended | Flush/Extended | Flush/Extended |
| | **Approved Temperature Ratings F°/C°** | | | |
| cULus | 135°F/57°C<br>155°F/68°C<br>175°F/79°C<br>200°F/93°C<br>286°F/141°C<br>360°F/182°C | 135°F/57°C<br>155°F/68°C<br>175°F/79°C<br>200°F/93°C<br>286°F/141°C<br>360°F/182°C | 135°F/57°C<br>155°F/68°C<br>175°F/79°C<br>200°F/93°C<br>286°F/141°C<br>360°F/182°C | 135°F/57°C<br>155°F/68°C<br>175°F/79°C<br>200°F/93°C<br>286°F/141°C<br>360°F/182°C |
| FM | – | – | 135°F/57°C<br>155°F/68°C<br>175°F/79°C<br>200°F/93°C<br>286°F/141°C<br>360°F/182°C | 135°F/57°C<br>155°F/68°C<br>175°F/79°C<br>200°F/93°C<br>286°F/141°C<br>360°F/182°C |
| LPCB | – | – | 135°F/57°C<br>155°F/68°C<br>175°F/79°C<br>200°F/93°C<br>286°F/141°C | 135°F/57°C<br>155°F/68°C<br>175°F/79°C<br>200°F/93°C<br>286°F/141°C<br>360°F/182°C |
| CE | – | – | 135°F/57°C<br>155°F/68°C<br>175°F/79°C<br>200°F/93°C<br>286°F/141°C<br>360°F/182°C | 135°F/57°C<br>155°F/68°C<br>175°F/79°C<br>200°F/93°C<br>286°F/141°C<br>360°F/182°C |
| Vds | – | – | 135°F/57°C<br>155°F/68°C<br>175°F/79°C<br>200°F/93°C<br>286°F/141°C<br>360°F/182°C | 135°F/57°C<br>155°F/68°C<br>175°F/79°C<br>200°F/93°C<br>286°F/141°C<br>360°F/182°C |
| CCC<br>ZSTZ-15 | – | – | 155°F/68°C<br>175°F/79°C<br>200°F/93°C<br>286°F/141°C<br>360°F/182°C | 155°F/68°C<br>175°F/79°C<br>200°F/93°C<br>286°F/141°C<br>360°F/182°C |

[2] For K-Factor when pressure is measured in Bar, multiply S.I. units by 10.

**NOTES**

- Listings and approval as of printing.
- Where cULus Listed, Polyester and VC-250 Coatings Listed as Corrosion Resistant (V3401 with VC-250 Only)
- Where FM Approved, VC-250 Coating Approved as Corrosion Resistant
- New York City Acceptance - All UL Listed and/or FM Approved sprinklers acceptable to NYC per section 28-113 of the Administrative Code and the OTCR Rule.

 © 2024 Victaulic Company. All rights reserved.

## 2.0 CERTIFICATION/LISTINGS (CONTINUED)

| RECESSED PENDENT APPROVALS/LISTINGS | | |
|---|---|---|
| **SIN** | **V2763** | **V3701** |
| Nominal K Factor Imperial | 5.6 | 8.0 |
| Nominal K Factor S.I.[2] | 8.1 | 11.5 |
| Orientation | PENDENT | PENDENT |
| Escutcheon | Recessed | Recessed |
| | | |
| cULus | 135°F/57°C<br>155°F/68°C<br>175°F/79°C<br>200°F/93°C<br>286°F/141°C<br>360°F/182°C | 135°F/57°C<br>155°F/68°C<br>175°F/79°C<br>200°F/93°C<br>286°F/141°C<br>360°F/182°C |
| FM<br>Both available with ½" and ¾" recessed escutcheon | 135°F/57°C<br>155°F/68°C<br>175°F/79°C<br>200°F/93°C<br>286°F/141°C<br>360°F/182°C | 135°F/57°C<br>155°F/68°C<br>175°F/79°C<br>200°F/93°C<br>286°F/141°C<br>360°F/182°C |
| LPCB | 135°F/57°C<br>155°F/68°C<br>175°F/79°C<br>200°F/93°C<br>286°F/141°C<br>360°F/182°C | 135°F/57°C<br>155°F/68°C<br>175°F/79°C<br>200°F/93°C<br>286°F/141°C<br>360°F/182°C |
| CE | 135°F/57°C<br>155°F/68°C<br>175°F/79°C<br>200°F/93°C<br>286°F/141°C<br>360°F/182°C | 135°F/57°C<br>155°F/68°C<br>175°F/79°C<br>200°F/93°C<br>286°F/141°C<br>360°F/182°C |
| VdS | 135°F/57°C<br>155°F/68°C<br>175°F/79°C<br>200°F/93°C<br>286°F/141°C<br>360°F/182°C | 135°F/57°C<br>155°F/68°C<br>175°F/79°C<br>200°F/93°C<br>286°F/141°C<br>360°F/182°C |
| CCC | 155°F/68°C<br>175°F/79°C<br>200°F/93°C<br>286°F/141°C<br>360°F/182°C | 155°F/68°C<br>175°F/79°C<br>200°F/93°C<br>286°F/141°C<br>360°F/182°C |

[2] For K-Factor when pressure is measured in Bar, multiply S.I. units by 10.

**NOTES**

- Listings and approval as of printing.
- Where cULus Listed, Polyester and VC-250 Coatings Listed as Corrosion Resistant (V3401 with VC-250 Only)
- Where FM Approved, VC-250 Coating Approved as Corrosion Resistant
- New York City Acceptance - All UL Listed and/or FM Approved sprinklers acceptable to NYC per section 28-113 of the Administrative Code and the OTCR Rule.

 © 2024 Victaulic Company. All rights reserved.

## 3.0 SPECIFICATIONS – MATERIAL

**Deflector:** Bronze

**Bulb Nominal Diameter:** 5.0 mm

**Load Screw:** Bronze

**Pip Cap:** Bronze

**Spring Seal:** PTFE coated Beryllium nickel alloy

**Frame**: Brass

**Lodgement Spring:** Stainless steel

**Installation Wrench:** Ductile iron

**Sprinkler Frame Finishes:**

- Plain brass
- Chrome plated
- White polyester painted[3, 4]
- Flat black polyester painted[3, 4]
- Custom polyester painted[3, 4]
- VC-250[5]

3 Not available on the Intermediate Level Style Pendent.

4 UL Listed for corrosion resistance.

5 UL Listed and FM Approved for corrosion resistance.

**NOTES**

- Weather resistant escutcheon available upon request.
- For cabinets and other accessories refer to separate sheet.

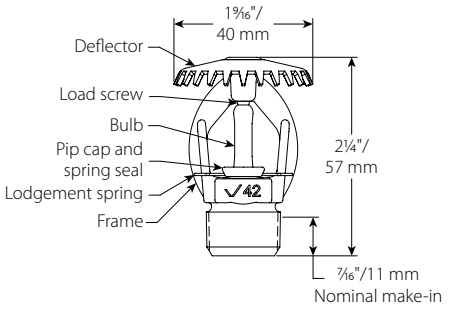


**V2861, V4261**

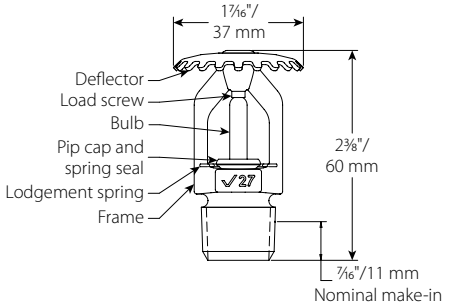


**V2703**

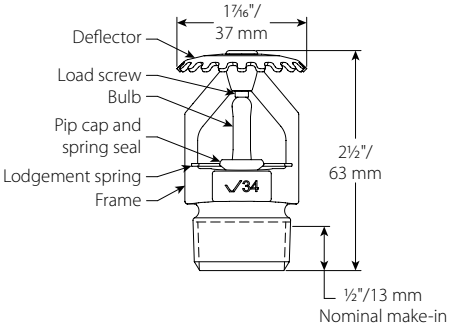


**V3401**

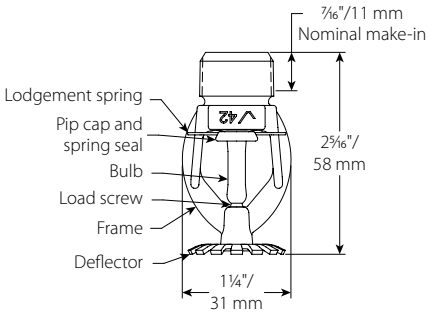


**V2851, V4251**

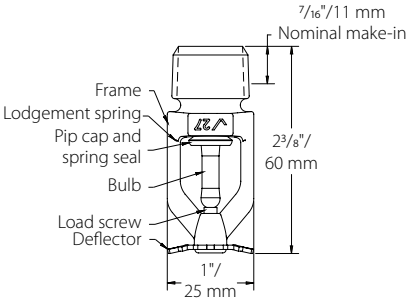


**V2763**

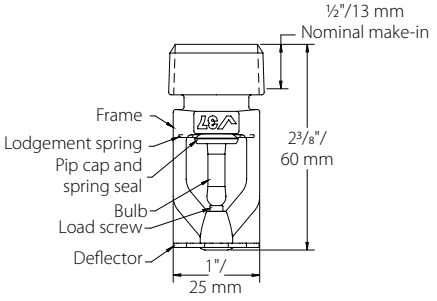


**V3701**

 © 2024 Victaulic Company. All rights reserved.

## 4.0 DIMENSIONS

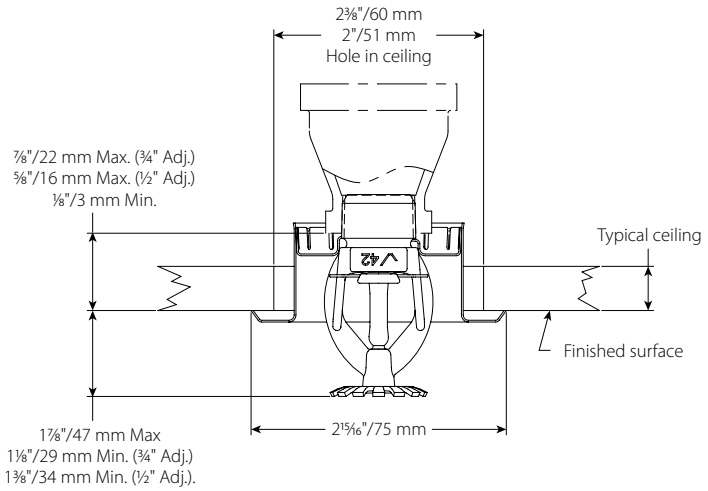


**V2851, V4251**

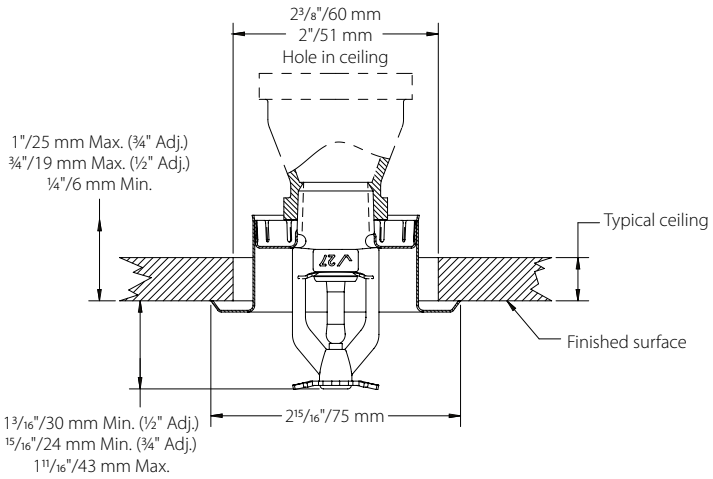


**V2763**

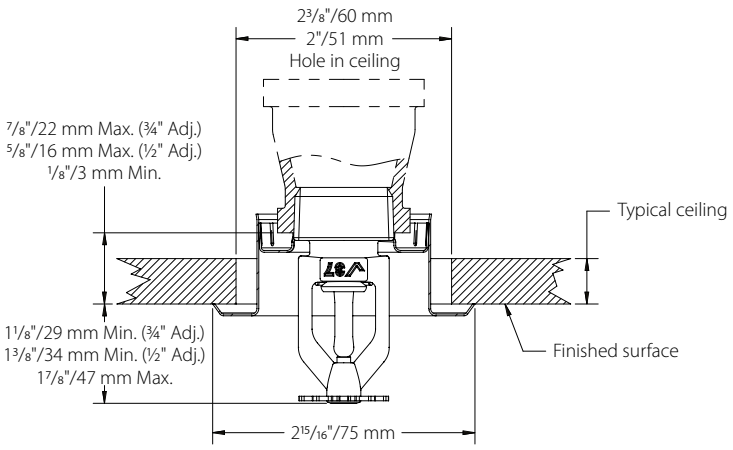


**V3701**

 © 2024 Victaulic Company. All rights reserved.

## 5.0 PERFORMANCE

Sprinklers to be installed and designed as per NFPA, FM Datasheets, or any local standards.

## 6.0 NOTIFICATIONS

**WARNING**

- **Read and understand all instructions before attempting to install any Victaulic products.**
- **Always verify that the piping system has been completely depressurized and drained immediately prior to installation, removal, adjustment, or maintenance of any Victaulic products.**
- **Wear safety glasses, hardhat, and foot protection.**

**Failure to follow these instructions could result in death or serious personal injury and property damage.**

- **These products shall be used only in fire protection systems that are designed and installed in accordance with current, applicable National Fire Protection Association (NFPA 13, 13D, 13R, etc.) standards, or equivalent standards, and in accordance with applicable building and fire codes. These standards and codes contain important information regarding protection of systems from freezing temperatures, corrosion, mechanical damage, etc.**
- **The installer shall understand the use of this product and why it was specified for the particular application.**
- **The installer shall understand common industry safety standards and potential consequences of improper product installation.**
- **It is the system designer's responsibility to verify suitability of materials for use with the intended fluid media within the piping system and external environment.**
- **The material specifier shall evaluate the effect of chemical composition, pH level, operating temperature, chloride level, oxygen level, and flow rate on materials to confirm system life will be acceptable for the intended service.**

**Failure to follow installation requirements and local and national codes and standards could compromise system integrity or cause system failure, resulting in death or serious personal injury and property damage.**

## 7.0 REFERENCE MATERIALS

**Ratings**: All glass bulbs are rated for temperatures from -67°F/-55°C to those shown in the table below.

1-40: Victaulic FireLock™ Automatic Sprinklers Installation and Maintenance Instructions

I-V9: Style V9 Victaulic FireLock™ IGS™ Installation-Ready™ Sprinkler Coupling Installation Instructions

**User Responsibility for Product Selection and Suitability**
Each user bears final responsibility for making a determination as to the suitability of Victaulic products for a particular end-use application, in accordance with industry standards and project specifications, as well as Victaulic performance, maintenance, safety, and warning instructions. Nothing in this or any other document, nor any verbal recommendation, advice, or opinion from any Victaulic employee, shall be deemed to alter, vary, supersede, or waive any provision of Victaulic Company's standard conditions of sale, installation guide, or this disclaimer.

**Intellectual Property Rights**
No statement contained herein concerning a possible or suggested use of any material, product, service, or design is intended, or should be constructed, to grant any license under any patent or other intellectual property right of Victaulic or any of its subsidiaries or affiliates covering such use or design, or as a recommendation for the use of such material, product, service, or design in the infringement of any patent or other intellectual property right. The terms "Patented" or "Patent Pending" refer to design or utility patents or patent applications for articles and/or methods of use in the United States and/or other countries.

**Note**
This product shall be manufactured by Victaulic or to Victaulic specifications. All products to be installed in accordance with current Victaulic installation/assembly instructions. Victaulic reserves the right to change product specifications, designs and standard equipment without notice and without incurring obligations.

**Installation**
Reference should always be made to the Victaulic installation handbook or installation instructions of the product you are installing. Handbooks are included with each shipment of Victaulic products, providing complete installation and assembly data, and are available in PDF format on our website at www.victaulic.com.

**Warranty**
Refer to the Warranty section of the current Price List or contact Victaulic for details.

**Trademarks**
*Victaulic* and all other Victaulic marks are the trademarks or registered trademarks of Victaulic Company, and/or its affiliated entities, in the U.S. and/or other countries.

 © 2024 Victaulic Company. All rights reserved.